PROJECTIONS OF PLANES

In this topic various plane figures are the objects.

What is usually asked in the problem?

To draw their projections means F.V, T.V. & S.V.

What will be given in the problem?

1. Description of the plane figure.
2. It's position with HP and VP.

In which manner it's position with HP & VP will be described?

1. **Inclination of it's SURFACE with one of the reference planes will be given.**
2. Inclination of one of it's EDGES with other reference plane will be given

(Hence this will be a case of an object inclined to both reference Planes.)

CASE OF A RECTANGLE – OBSERVE AND NOTE ALL STEPS.

SURFACE **PARALLEL** TO HP

PICTORIAL PRESENTATION

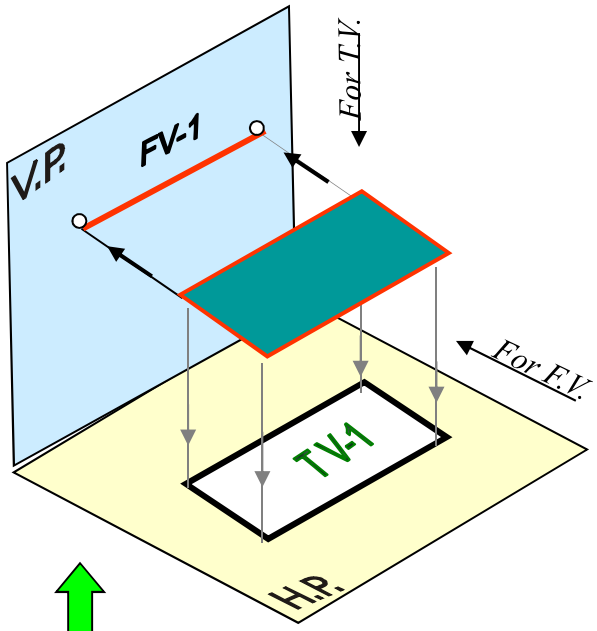

ORTHOGRAPHIC

TV-True Shape

FV- Line // to xy

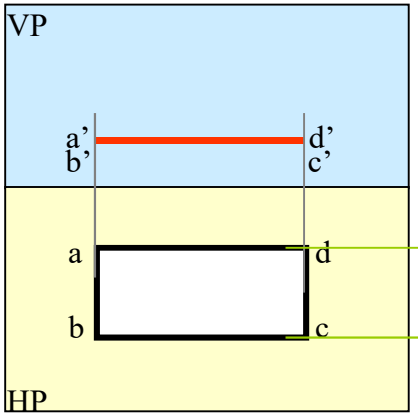

A

SURFACE **INCLINED** TO HP

PICTORIAL PRESENTATION

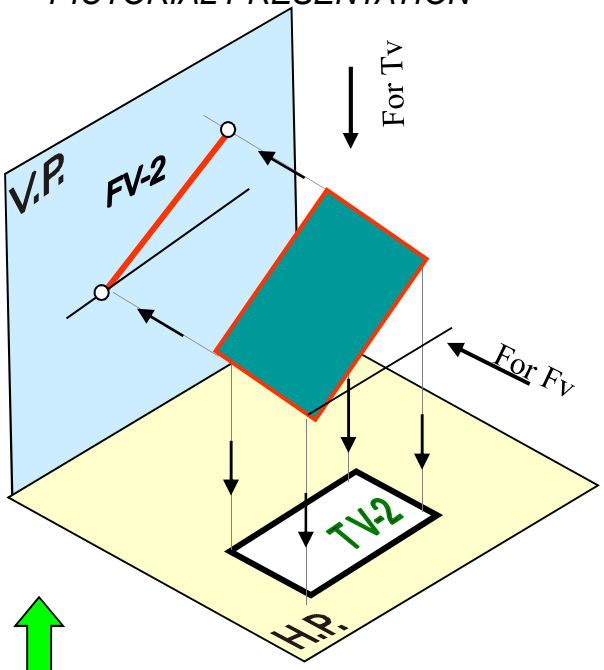

ORTHOGRAPHIC

FV- Inclined to XY

TV- Reduced Shape

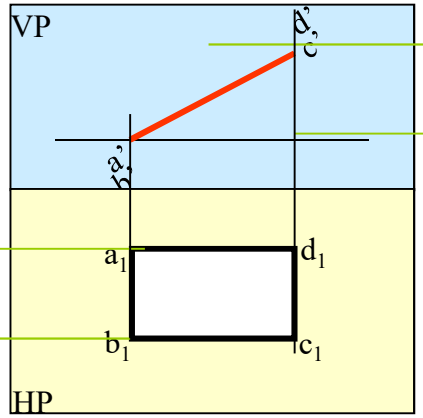

B

ONE SMALL SIDE INCLINED TO VP

PICTORIAL PRESENTATION

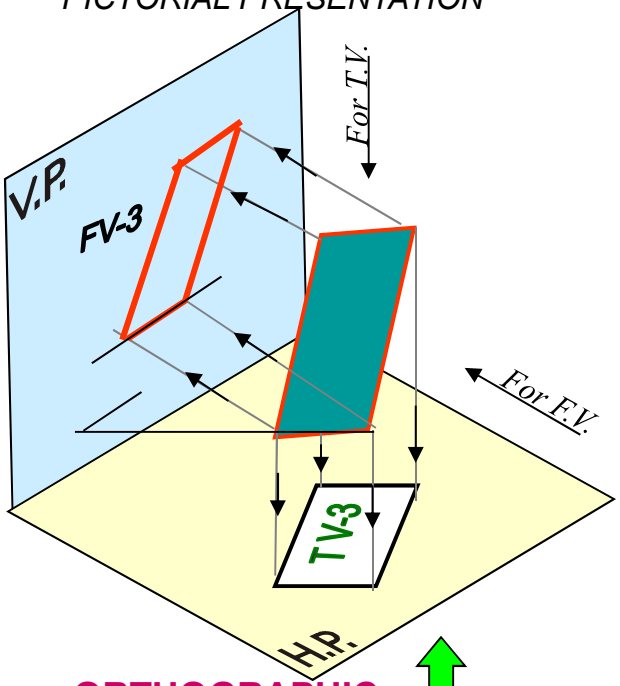

ORTHOGRAPHIC

FV- Apparent Shape

TV-Previous Shape

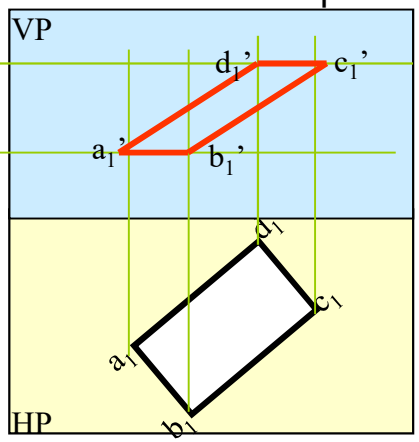

C

PROCEDURE OF SOLVING THE PROBLEM:

IN THREE STEPS EACH PROBLEM CAN BE SOLVED:(As Shown In Previous Illustration)

STEP 1. Assume suitable conditions & draw Fv & Tv of initial position.

STEP 2. Now consider surface inclination & draw 2nd Fv & Tv.

STEP 3. After this,consider side/edge inclination and draw 3rd (final) Fv & Tv.

ASSUMPTIONS FOR INITIAL POSITION:

(Initial Position means assuming surface // to HP or VP)

1.If in problem surface is inclined to HP – assume it // HP

Or If surface is inclined to VP – assume it // to VP

2. Now if surface is assumed // to HP- It's TV will show True Shape.

And If surface is assumed // to VP – It's FV will show True Shape.

3. Hence begin with drawing TV or FV as True Shape.

4. While drawing this True Shape –

keep one side/edge (which is making inclination) perpendicular to xy line

(similar to pair no. A on previous page illustration).

Now Complete STEP 2. By making surface inclined to the resp plane & project it's other view.

(Ref. 2nd pair B on previous page illustration)

Now Complete STEP 3. By making side inclined to the resp plane & project it's other view.

(Ref. 3nd pair C on previous page illustration)

Q1: A regular pentagon of 25mm side has one side on the ground. Its plane is inclined at 45º to the HP and perpendicular to the VP. Draw its projections and show its traces

Q1: A regular pentagon of 25mm side has one side on the ground. Its plane is inclined at 45º to the HP and perpendicular to the VP. Draw its projections and show its traces

Hint: As the plane is inclined to HP, it should be kept parallel to HP with one edge perpendicular to VP

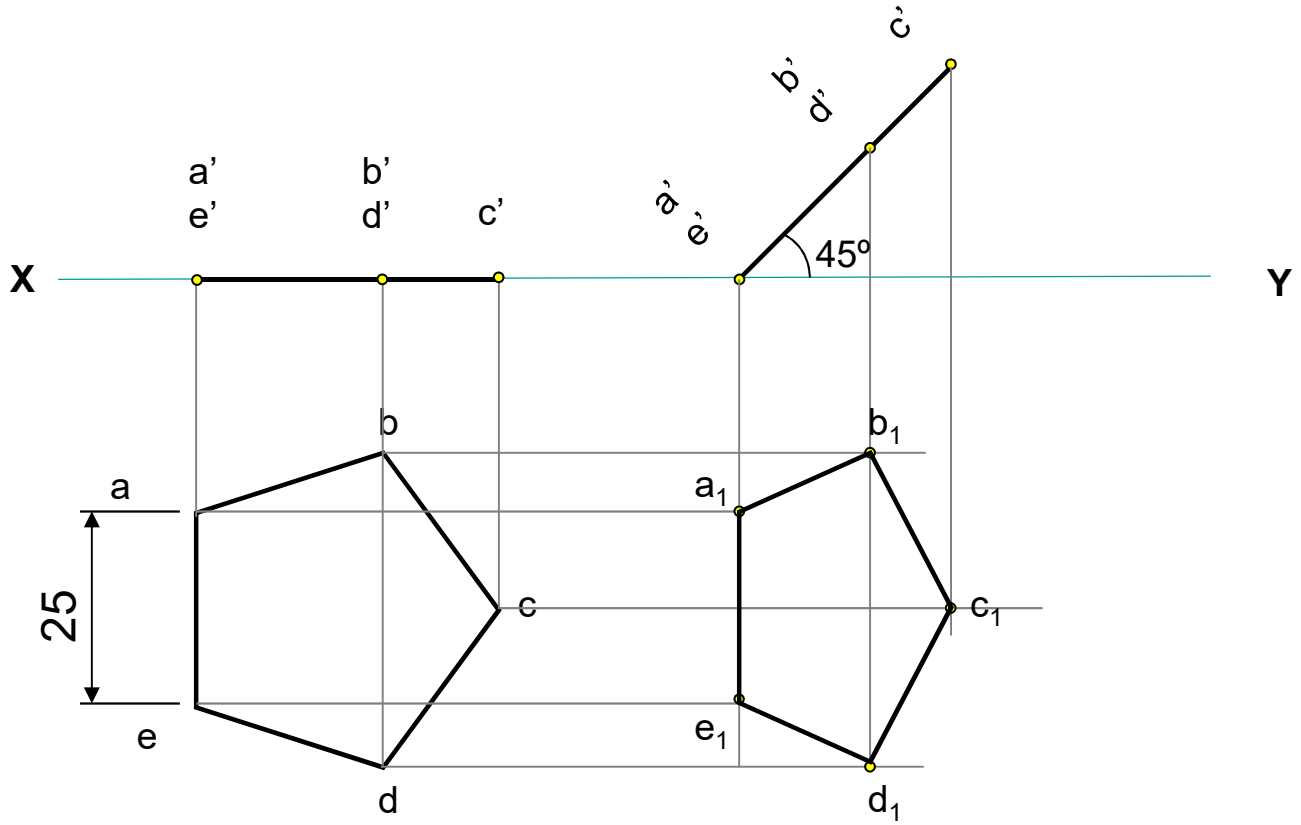

Q 1: A regular pentagon of 25mm side has one side on the ground. Its plane is inclined at 45º to the HP and perpendicular to the VP. Draw its projections and show its traces

Q. 2:Draw the projections of a circle of 5 cm diameter having its plane vertical and inclined at 30º to the V.P. Its centre is 3cm above the H.P. and 2cm in front of the V.P. Show also its traces

Q. 2:Draw the projections of a circle of 5 cm diameter having its plane vertical and inclined at 30º to the V.P. Its centre is 3cm above the H.P. and 2cm in front of the V.P. Show also its traces

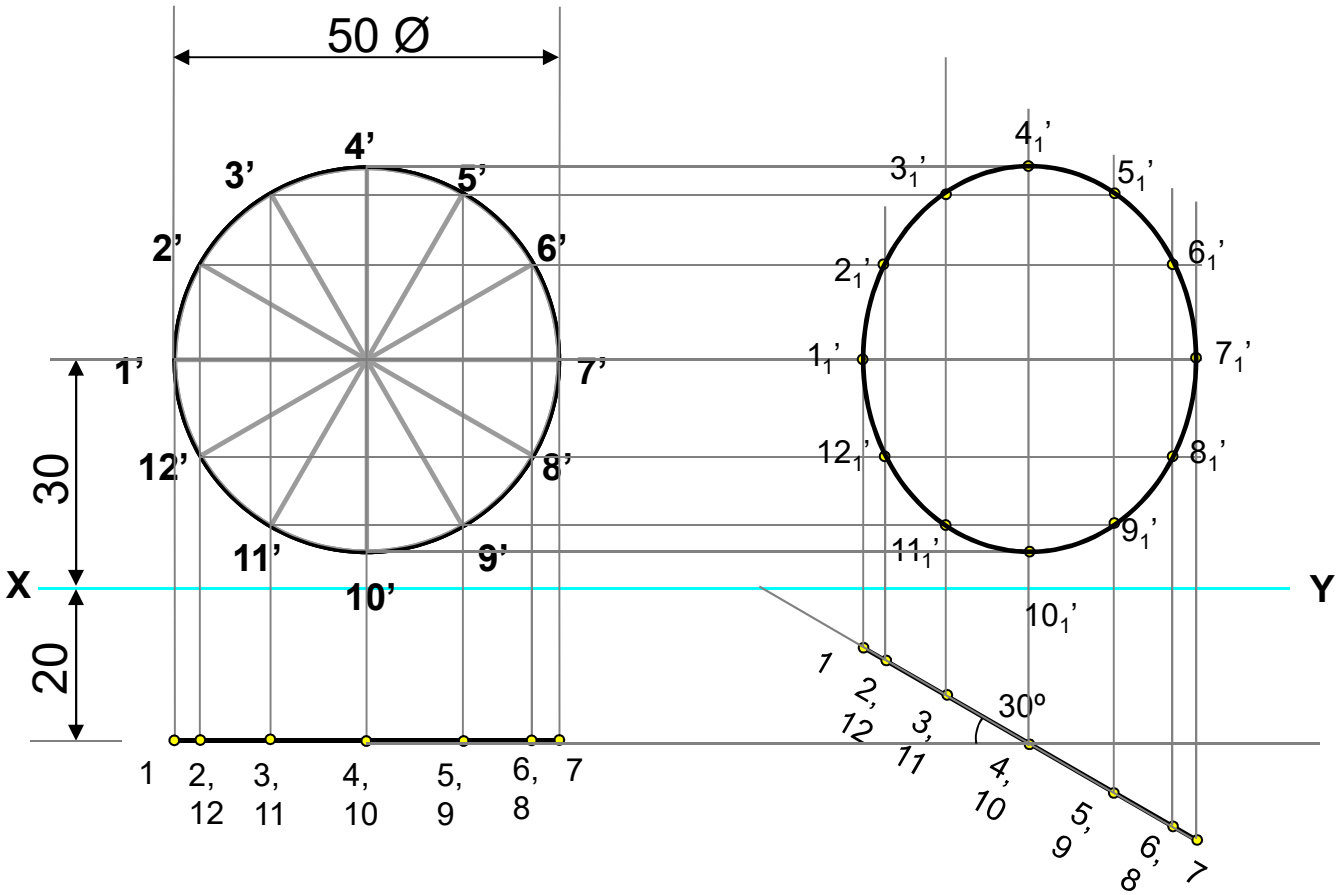

Q 1: A regular pentagon of 25mm side has one side on the ground. Its plane is inclined at 45º to the HP and perpendicular to the VP. Draw its projections and show its traces

Q. 2:Draw the projections of a circle of 5 cm diameter having its plane vertical and inclined at 30º to the V.P. Its centre is 3cm above the H.P. and 2cm in front of the V.P. Show also its traces

Q 3: Draw the projections of a regular hexagon of 25mm sides, having one of its side in the H.P. and inclined at 60 to the V.P. and its surface making an angle of 45º with the H.P.

Q 3: Draw the projections of a regular hexagon of 25mm sides, having one of its side in the H.P. and inclined at 60 to the V.P. and its surface making an angle of 45º with the H.P.

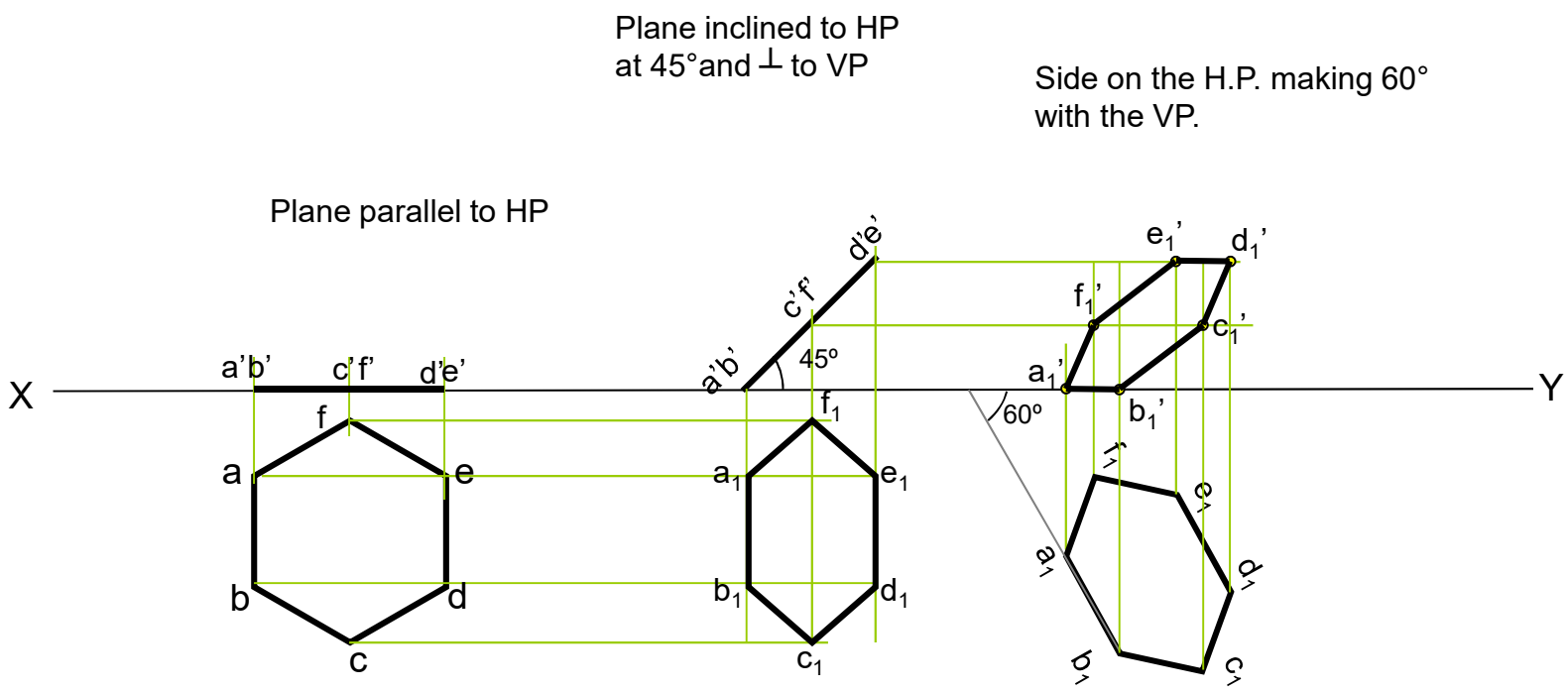

Qus :A semicircular plate of 80mm diameter has its straight edge in the VP and inclined at 45 to HP.The surface of the plate makes an angle of 30 with the VP. Draw its projections.

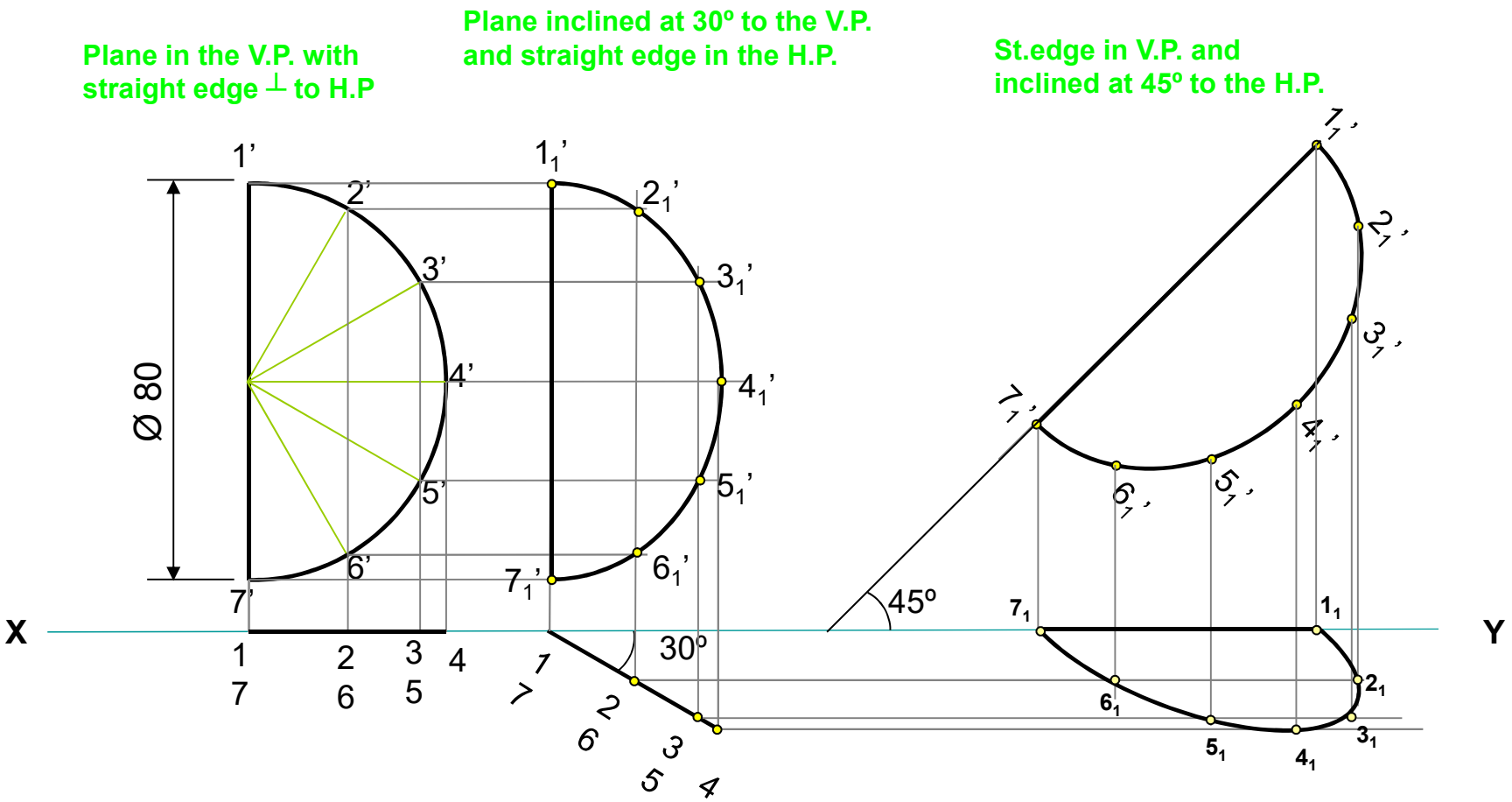

FREELY SUSPENDED CASES.

IMPORTANT POINTS

1.In this case the plane of the figure always remains ***perpendicular to Hp***.
2.It may remain parallel or inclined to Vp.
3.Hence ***TV*** in this case will be always a ***LINE view.***
4.Assuming surface // to Vp, draw true shape in suspended position as FV.
(Here keep *line joining* ***point of contact & centroid of fig. vertical***)
5.Always begin with FV as a True Shape but in a suspended position.
AS shown in 1st FV.

Problem

:A semicircle of 100 mm diameter is suspended from a point on its straight edge 30 mm from the midpoint of that edge so that the surface makes an angle of 45^0 with VP.
Draw its projections.

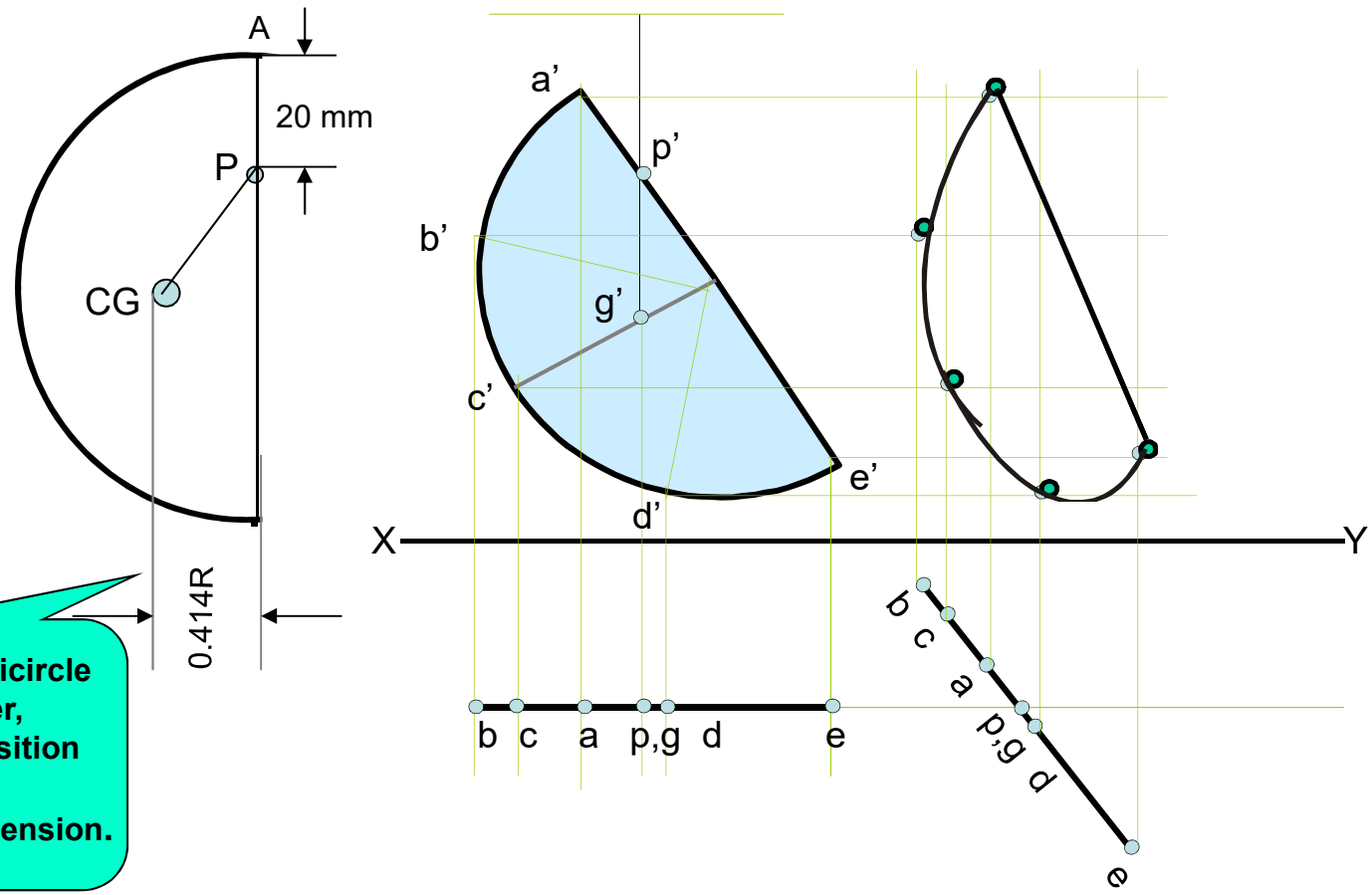

First draw a given semicircle With given diameter, Locate it's centroid position And join it with point of suspension.

IMPORTANT POINTS

1.In this case the plane of the figure always remains ***perpendicular to Hp.***
2.It may remain parallel or inclined to Vp.
3.Hence ***TV*** in this case will be always a ***LINE view.***
4.Assuming surface // to Vp, draw true shape in suspended position as FV.
(Here keep *line joining* ***point of contact & centroid of fig. vertical***)
5.Always begin with FV as a True Shape but in a suspended position.
AS shown in 1st FV.

Problem :
An isosceles triangle of 40 mm long base side, 60 mm long altitude Is freely suspended from one corner of Base side.It's plane is 45⁰ inclined to Vp. Draw it's projections.

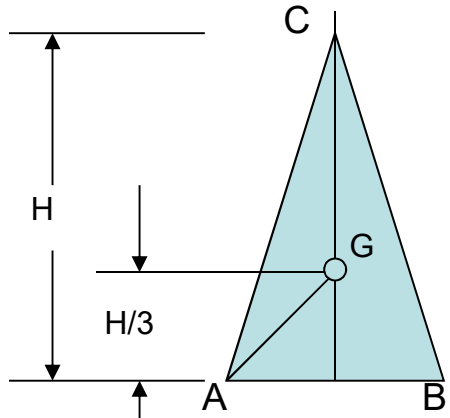

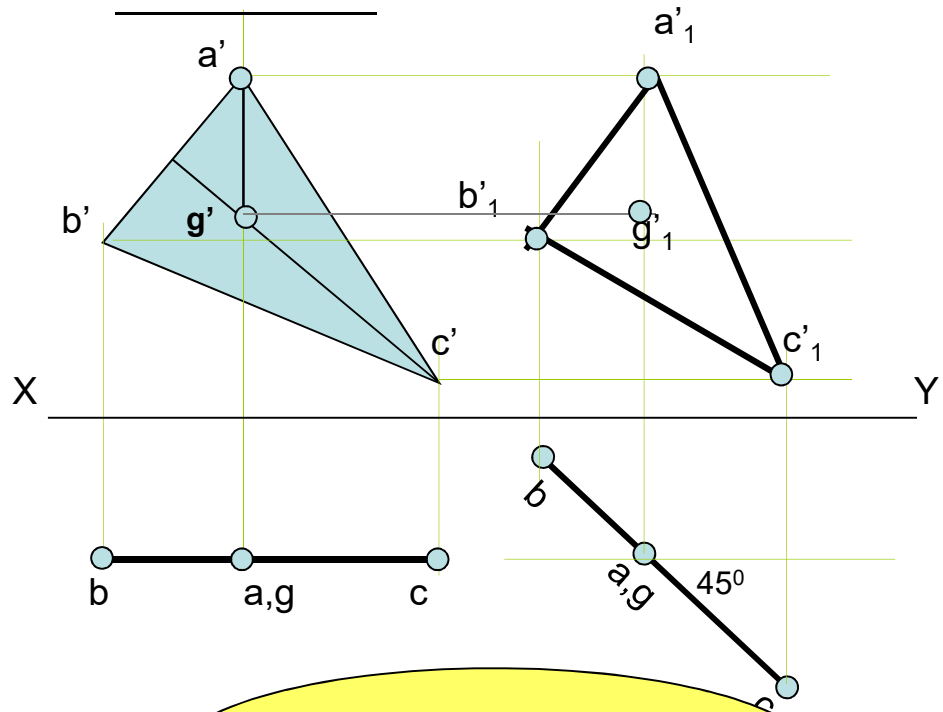

First draw a given triangle With given dimensions, Locate it's centroid position And join it with point of suspension.

Similarly solve next problem of Semi-circle